1

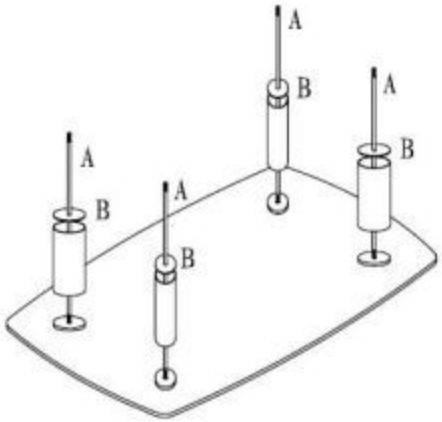

2

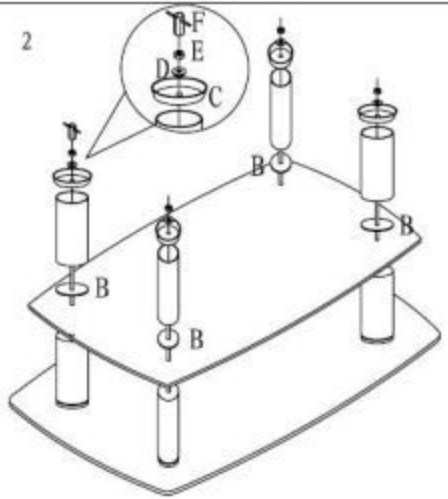

A	x4
B	x4
C	x4
D	x4
E	x4
F	x1
G	
H	
I	
J	

3

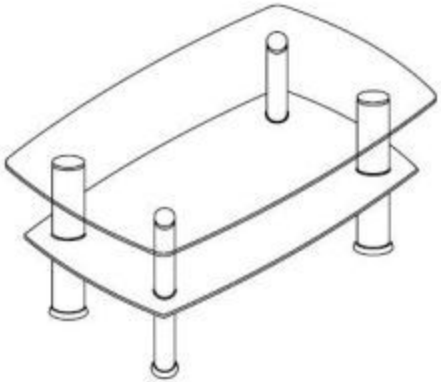

DARIAC