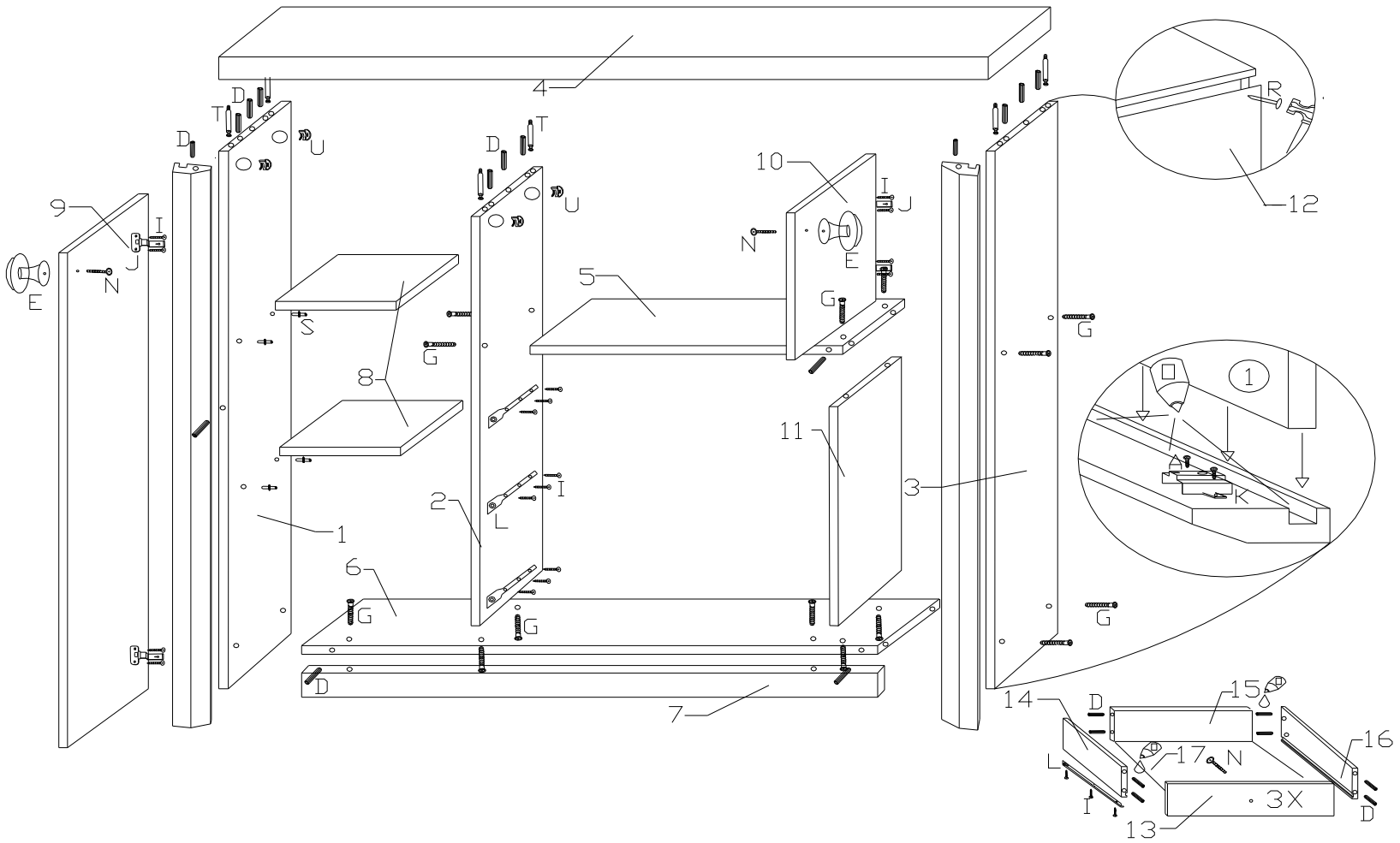
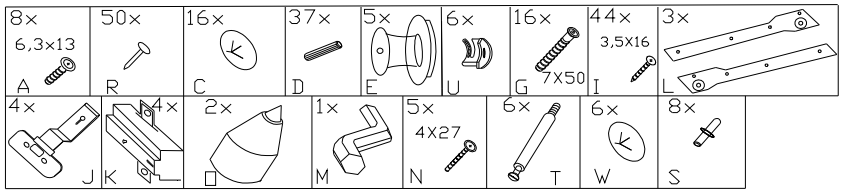
VENUS VN-8/9


4
D
T
U
9
I
J
E
N
S
G
8
10
5
11
3
2
L
1
6
7
12
R
K
15
14
16
17
3X
13


8× 6,3×13 A
50× R
16× C
37× D
5× E
6× U
16× 7X50 G
44× 3,5X16 I
3× L
4× J
4× K
2× O
1× M
5× 4X27 N
6× T
6× W
8× S