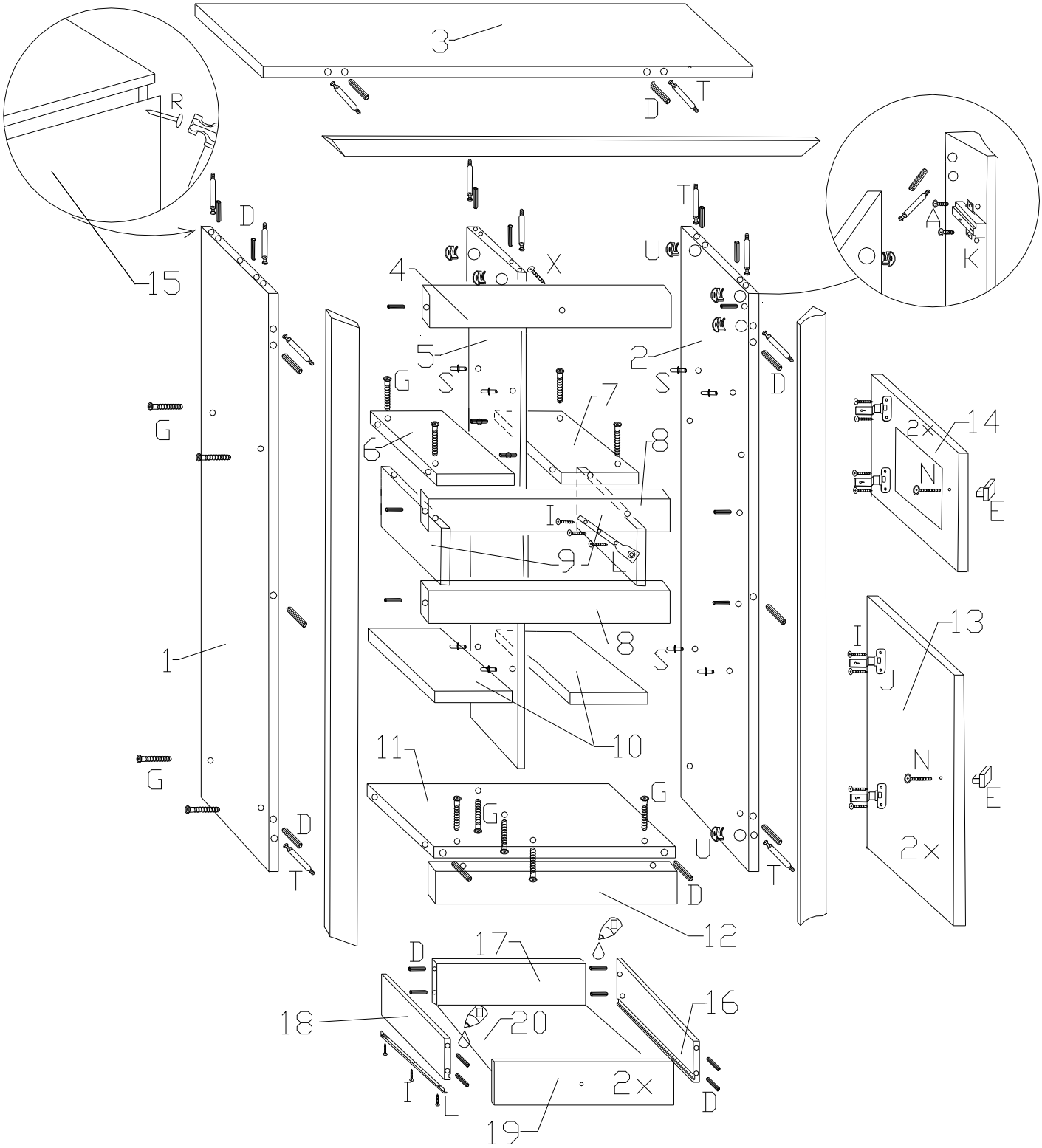
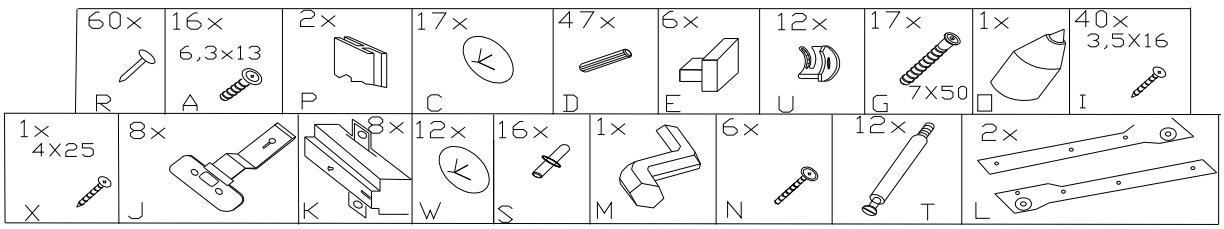
MARS MR-6


3
R
D
T
A
K
15
D
4
X
U
T
5
2
G
S
S
D
7
G
6
8
2×
14
N
E
I
9
L
8
1
13
I
J
S
10
N
E
11
G
G
G
U
T
D
2×
D
12
D
17
16
18
20
I
L
2×
D
19


60×
R
16×
6,3×13
A
2×
P
17×
C
47×
D
6×
E
12×
U
17×
7X50
G
1×
□
40×
3,5X16
I
1×
4X25
X
8×
J
8×
K
12×
W
16×
S
1×
M
6×
N
12×
T
2×
L